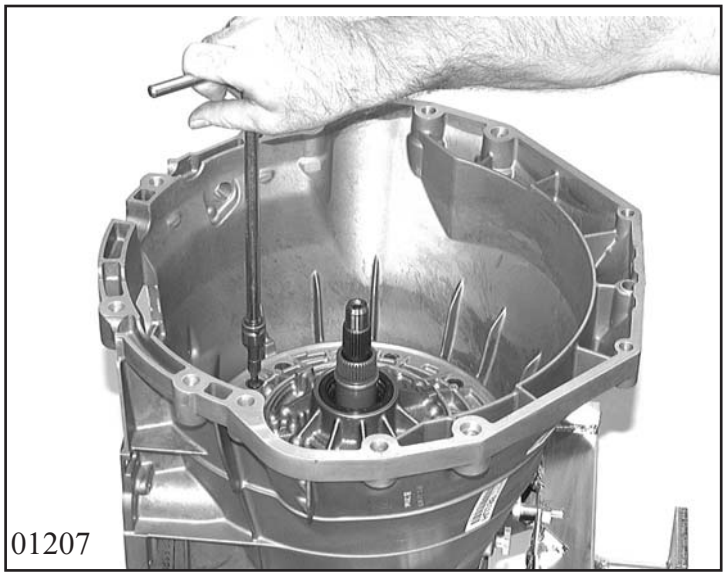
01207

Turn transmission by 90°. Completely remove oil supply unit. To do this, loosen 14 Torx screws and remove with Usit rings.

(Wrench size = Torx - TX 27)

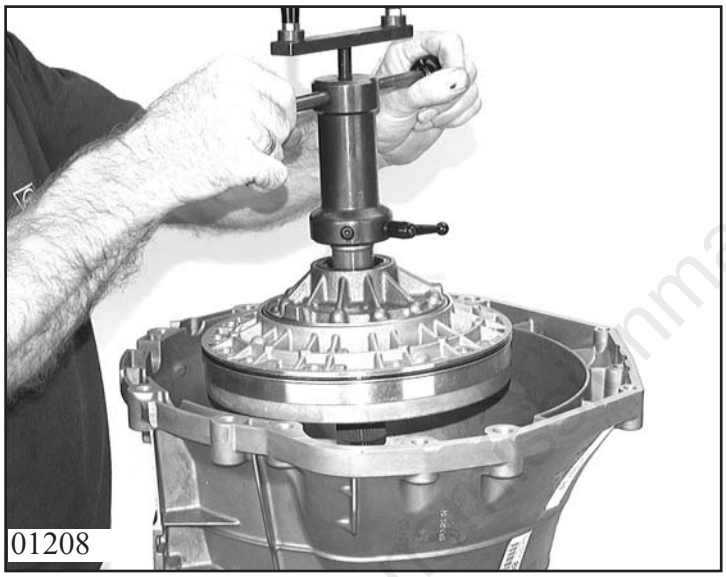
01208

Press out the oil supply unit with jack 5x46 000 563 and lift off.

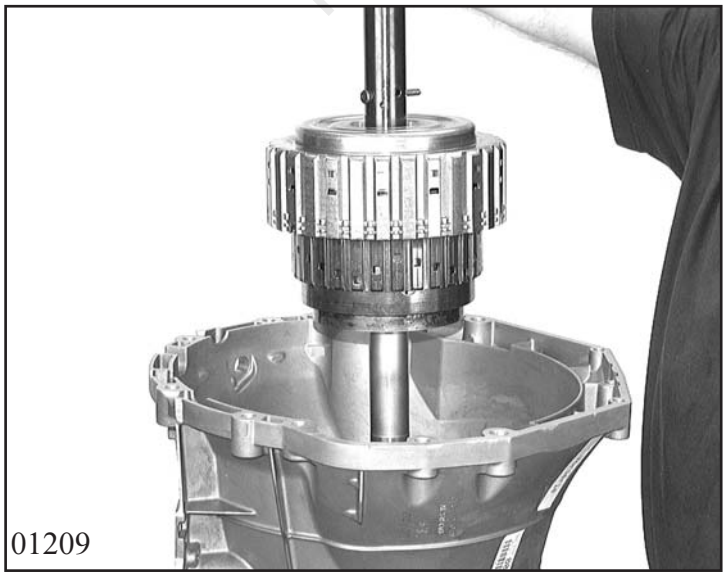
01209

Take out the shim washer.
Remove turret (input with clutches A and E).
To do this, lock lifting device 5x46 002 563 in the input shaft with 5 mm mandrel. Take out the complete unit by hand.
Insert turret into fixture 5x46 000 917 and remove the fixture.